Latera Acute



hospital bed with a lateral tilt

Latera Acute



* in comparison with a standard bed, LINET 2014

Routine nursing activities often require physical handling of the patient several times a day, often in non-ergonomic positions. LINET has developed the Latera Acute patient bed with a lateral tilt to turn the patient with little physical exertion, minimising excessive physical strain and the risk of injury.



Patient

— Makes prevention of pressure injury more effective

— Helps prevent complications with immobilisation

Staff

— Reduces the physical strain

— Eliminates the risk of occupational strain

— Saves time required for nursing activities

Management

— Saves significant time and work capacity

— Increases the quality of the life of long-term immobile patients

Lateral tilt

The three-column bed construction, which enables the lateral tilt, also provides the bed with high stability and rigidity and a basis for the bed´s easy hygiene and mature modern design.

The benefits of the Latera Acute for daily nursing activities are subject to two basic prerequisites:

— The adjustment of the lateral tilt is safer for patients

— The lateral tilt adjustment is easy and reliable for nursing activities



Simple and reliable control

Staff is able to effectively position the patient bed using conveniently located control panels.

Safety GO button

Enhances patient safety by preventing unintentional bed positioning. The GO button activates the bed controls for 3 minutes.



FOOT CONTROLS

Foot controls for lateral tilt and height adjustment are located on both sides of the bed enabling practical hands-free handling.



SAVING

30%

OF ENERGY*

Procedure for making the bed with a lateral tilt

Changing bed linen is just one way in which the lateral tilt can be effectively used.

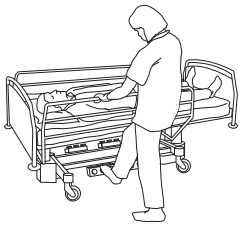

1. The nurse can adjust the bed to a safe working height.



2. The siderail closest to the nurse is raised. Using the foot controls the nurse can tilt the bed laterally.



3. The lateral tilt takes over a substantial part of the work required to turn the patient. The nurse exerts less than ten times as much effort.



4. With the patient's position stable, the nurse can change the bed linen from the other side.

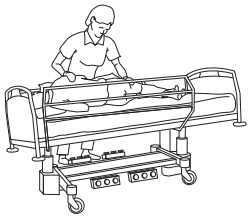

5. Using the foot controls, the nurse can turn the patient onto their back, raise the other siderail and place a Latera positioning cushion against it to protect the patient.

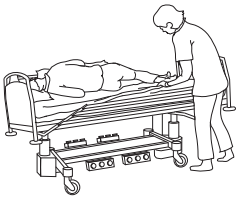

6. The patient can then be turned onto their other side and the nurse can finish changing the bed linen.

* by turning the patient in comparison with a standard bed, LINET 2014

Enhanced patient´s safety

The Latera Acute helps nurses to care for patients and also ensures higher safety for them.



Brake alarm

The brake alarm prevents the patient from falling off the bed because the bed brakes have not been locked and also provides simple control over the bed by the medical staff. The bed emits an audio signal when left unbraked while the main power cable is plugged.

Night light

Undercarriage light helps with moving in dark corridors and provides gentle light at night.

Easy handling of the bed

The central 5th castor significantly improves the bed's transport features. In places with inadequate space the 5th castor can be used to manoeuvre the bed virtually in one spot without needing to overtake and move backwards. On the contrary, the 5th castor can be used on long corridors without swerving the bed – it keeps to a good straight direction.

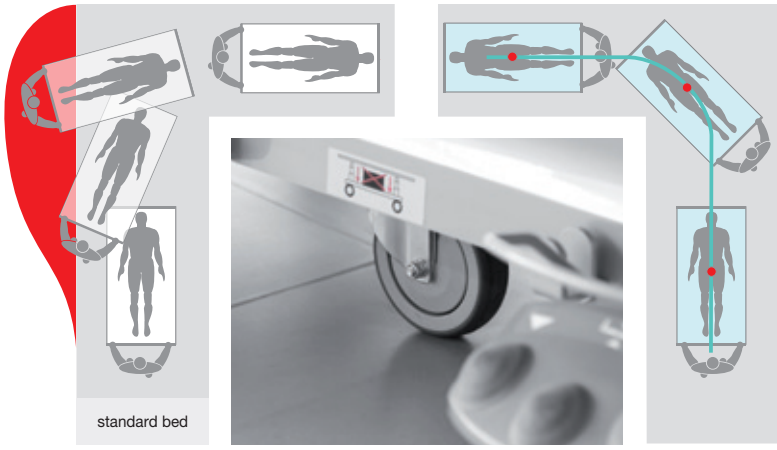





Siderails concept

Single collapsible 3/4 powder coated siderails with releasing mechanism in the safe position.



Protector

Protector provides extra safety by covering full lenght of the bed.



Extender

Extender enabes the use of an active mattress on the bed and increases the height of the bed by 10 cm.

Prevention of nosocomial infections

The basis for the easy and quality hygiene of the Latera Acute beds consists of a column lifting unit. The columns are smooth aluminium profiles without difficulty to clean gaps and joints.
The bed's easy hygiene concept is also based on joint-free technology of plastics consisting of considerable bed space exposed to infectious dirt.



Technical parameters

1 Siderails

Single collapsible bed siderails provide patient protection against a fall and also stabilise the patient in a lateral position.

2 Bed ends

Removable plastic ends enable quick and easy hygiene.
The décor of the panel can be supplied in various shades from the LINET range.

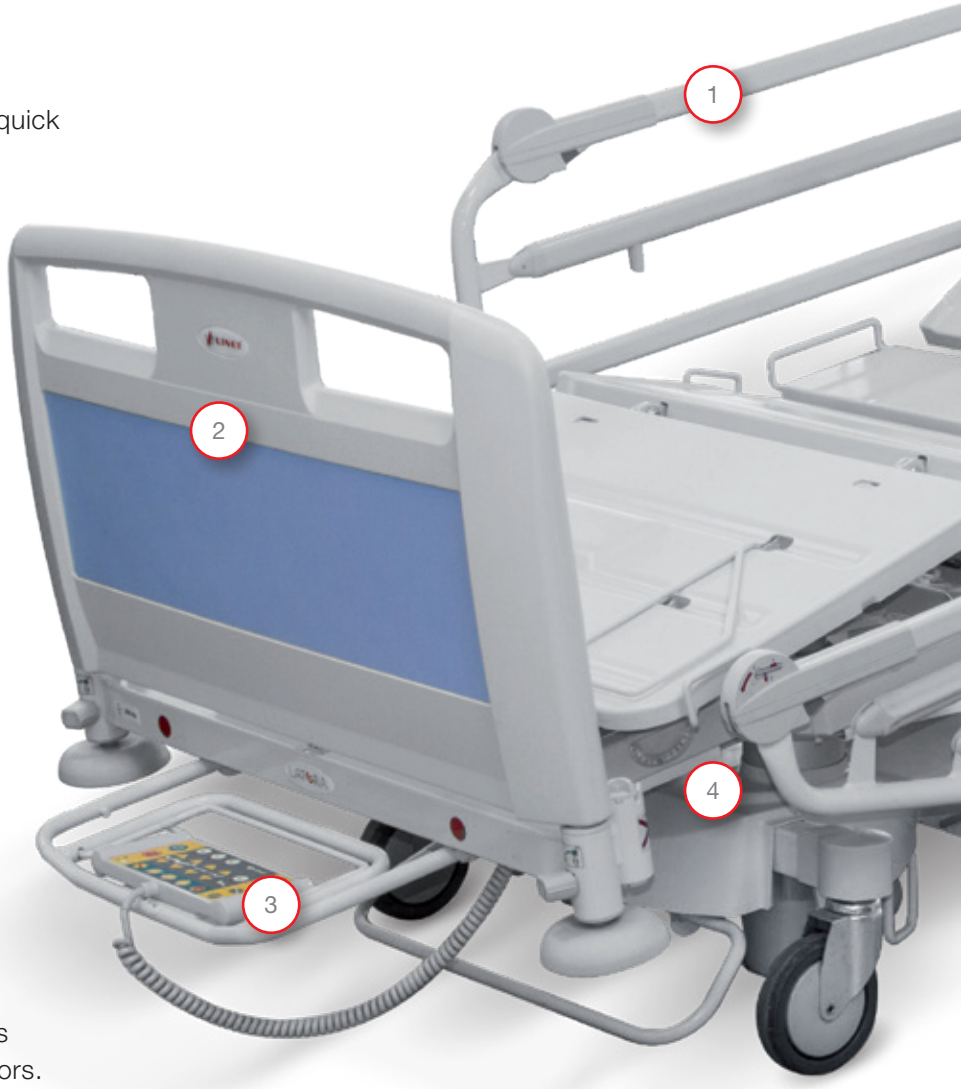

3 Supervisor nurse control

Central nurse control can be adjusted to all the bed position, contains memory of frequently used positions, Go button, battery capacity and lifetime indicator.

4 Bed extension

Integrated bed extension allows the adjustment of the mattress platform length.

5 Mattress platform

Four-section mattress platform is adjustable with the aid of actuators. Its surface consists of removable, easily washable plastic parts.

6 Columns

Electric lifting units placed in three columns enable the mattress platform height adjustment and that of other positions including the lateral tilt. The column construction ensures the bed's perfect stability.

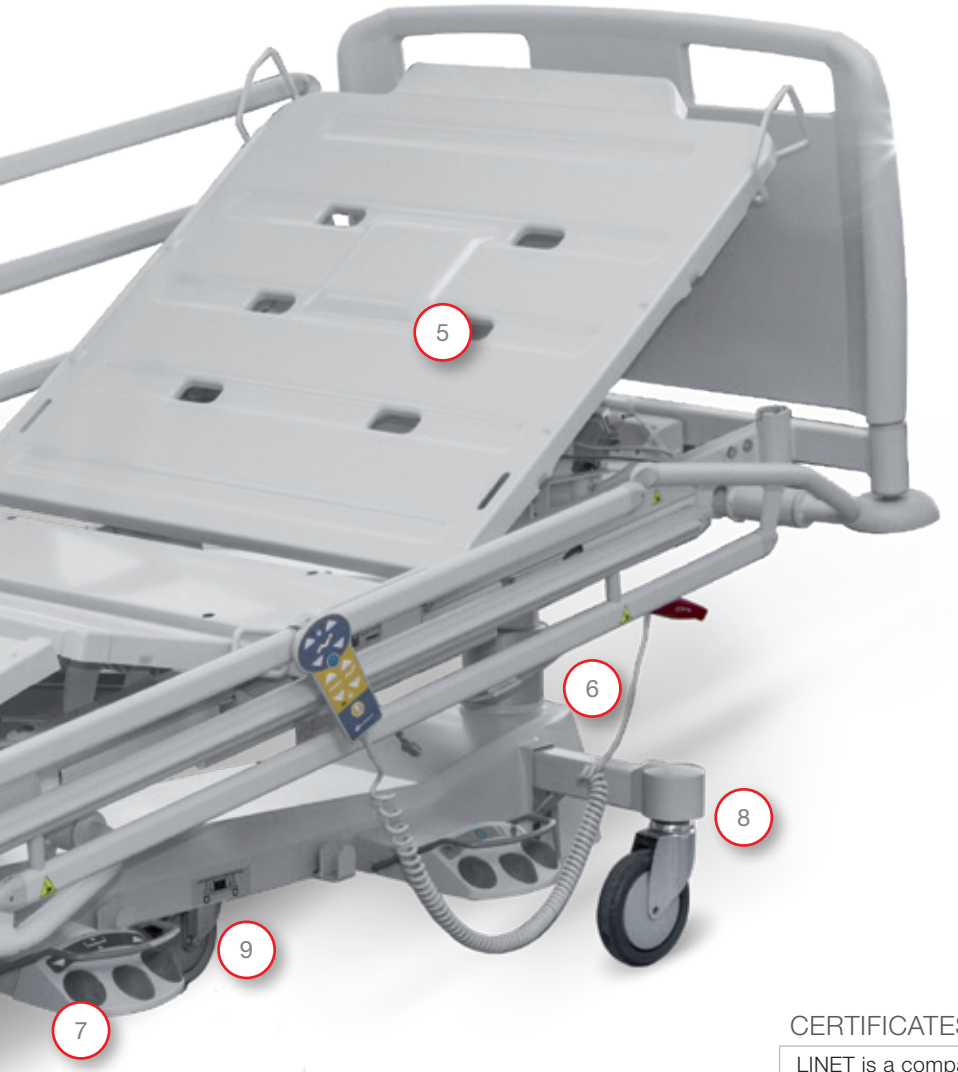

7 Foot controls

Bed height controls and lateral tilt controls are placed on both sides of the bed. The controls are protected against spontaneous activation by a mechanical barrier, equipped with an electric lock and GO button.

8 Castors

The 150 mm in diameter castors are available in the Tente Concept and Tente Concept Plus option.

9 5th castor

The 5th castor facilitating handling of the bed during transport.

TECHNICAL PARAMETERS

External dimensions	219 × 98.5 cm
Bed extension	± 12,5 cm
Mattress dimensions	200×86cm
Mattress platform height adjustment	43–81 cm
Lateral tilt	15°
TR/ATR tilt	± 16°
Backrest tilt	0°– 60°
Tighrest tilt	0°– 46°
Clearance height	15 cm
Safety work load	200 kg

CERTIFICATES

LINET is a company certified under European norms and quality systems: EN ISO 9001, EN ISO 13485, EN ISO 14001
The products are produced under European norms for medical technology and hospital beds: EN 60601-1, EN 60601-1-2, EN 60601-1-6, EN 60601-2-52

ELECTRIC PARAMETERS

Power supply	230 V, ±10 %
Maximum input	max. 1,6 A 370 VA
Cover against water and dust penetration	IPX4
Type of protection against electric current	class I

Technical parameters

Basic equipment

- Fully electrical bed with a column construction
- Safety work load 200 kg
- Single collapsible siderails
- Autoregression 11 cm
- Mechanical CPR for unblocking the backrest as well as electrical CPR.
- Removable plastic bed ends with coloured panel and safety lock
- Extension and shortening of the bed
- Patient's handset
- Supervisor nurse's control, 4-position memory
- Safety control with GO button
- Autocontour button
- Backup battery with intelligent charger and diagnostic service-life
- Linen shelf with Supervisor nurse's control panel holder
- Tente Concept castors, 150 mm central brake
- Protective corner bumpers
- Plastic undercarriage covers
- 2 bushings for lifting poles or infusion stand
- Transport mains cable holder
- Segufix fixing belt holders
- Mattress holders

Optional features

- 4-section ABS plastic mattress platform
- Aluminium or coated bed ends
- 5th castor
- Brake alarm
- Foot controls
- Safety night lighting
- Patient's satellite

Design is your choice

Play of colours

The Latera Acute bed design meets the latest aesthetic trends in healthcare. The colour scheme of the bed ends is highly variable and fully blends in with their surroundings.

COLOUR RANGE

Oslo blue, Nectarine,
Grapefruit, Kiwi, Aquamarine,
Light grey, Pearl white, White



Wooden panels

Although the Latera Acute is a hospital bed, it offers not only a modern range of colours, but also wooden decors. It evokes a homely and pleasant indoor feeling. This particularly applies to older users who feel better in traditional surroundings and has a calming effect.

WOOD DECORS

Zebra moka, Beech Provence,
Maple white, Frontier amber



Latera Thema

Latera Thema is a bed with lateral tilt intended for a hospital use, especially for the non-acute departments. A home looking design based on siderails and bedends with progressive aluminium elements makes the bed suitable also for above-standard rooms and private modern clinics.





The three-column construction enables lateral tilt adjustment and provides the bed with exceptional stability and rigidity.



The lateral tilt is a useful aid for nursing staff, they can effectively manage the care of a patient with the minimum of effort.

Latera Acute

Patient

- Makes prevention of pressure ulcers more effective
- Helps prevent complications with immobilisation



Staff

- Reduces the physical strain
- Eliminates the risk of occupational strain
- Saves time required for nursing activities



Management

- Saves significant time and work capacity
- Increases the quality of the life of long-term immobile patients





wissner-bosserhoff

LINET®

Members of LINET Group

LINET spol. s r.o.
Želevčice 5 | 274 01 Slaný | Czech Republic
tel.: +420 312 576 400 | fax: +420 312 522 668 | e-mail: info@linet.com | www.linet.com

LINET | Art. nº 9601-1019-05 | Edition 03/2020 | Slight colour differences are possible. Change of technical parameters reserved.